Smart Control Joystick
User Manual



2025.10 Version 1.0

Copyright © ePropulsion Technology Limited

Acknowledgement

Thanks for choosing ePropulsion products, your trust and support in our company are sincerely appreciated. We are dedicated to providing high-performance electric outboards, electric outboards, sup/kayak motors, reliable lithium batteries and accessories.

Welcome to visit www.epropulsion.com and contact us if you have any concerns.

Using This Manual

Before use of the product, please read this user manual thoroughly to understand the correct and safe operations. By using this product, you hereby agree that you have fully read and understood all contents of this manual. ePropulsion accepts no liability for any damage or injury caused by operations that contradict this manual.

Due to ongoing optimization of our products, ePropulsion reserves the rights of constantly adjusting the contents described in the manual. ePropulsion also reserves the intellectual property rights and industrial property rights including copyrights, patents, logos and designs, etc.

This manual is subject to update without prior notice, please visit our website www.epropulsion.com for the latest version. If you find any discrepancy between your products and this manual, or should you have any doubts concerning the product or the manual, please visit www.epropulsion.com. ePropulsion reserves the rights of final interpretation of this manual.

This manual is multilingual, in case of any discrepancy in the interpretation of different language versions, the English version shall prevail.

Symbols

The following symbols will help to acquire some key information.

 Important instructions or warnings

 Useful information or tips

Product Serial Number

The serial number is located as shown below. Please take note of it and keep it in a safe place, as it may be required when purchasing accessories or if you need service or warranty.

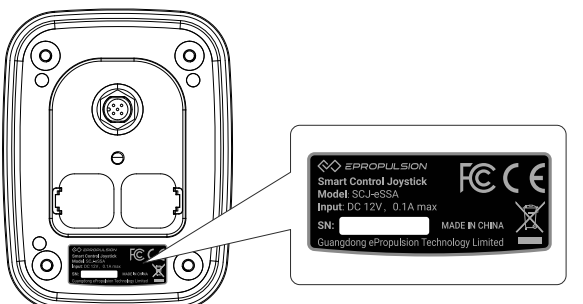

Table of Contents

THANK YOU **1**

Conditions of Use **1**

Product Serial Number **2**

1 Product Introduction **5**

1.1 In the Package 5

1.2 Specification 6

1.3 Notice 6

1.4 EU Declaration of Conformity 6

1.5 FCC Compliance Statement 7

1.6 Disposal and Environment 8

2 Installation and Wiring **9**

3 Function **12**

3.1 Setting before Use 12

3.2 Function Description 12

3.2.1 OmniGlide 13

3.2.2 Heading Hold 13

3.2.3 AnchorPoint 14

3.2.4 Surge 15

4 Limited Warranty **17**

4.1 Warranty Exclusions 19

4.2 Limited Warranty Claim Procedures 20

1 Product Introduction

The Smart Control Joystick is a portable control device provided by ePropulsion that integrates throttle, gear, and directional control, enabling users to operate vessels with ease and flexibility. The joystick also supports assisted piloting functions, including heading hold and position hold.

1.1 In the Package

Items	Qty.	Figure
Smart Control Joystick	1 pcs	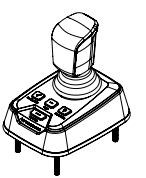
Joystick Communication Cable 1m	1 pcs	XS-SJ02-00 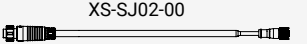 or 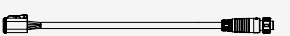 XS-SJ01-00
Hex Locknut M5	4 pcs	
User Manual	1 set	

Save ePropulsion original package for transport and storage.

1.2 Specification

Smart Control Joystick	
Communication	Wired
Rated Voltage	12V/24V
Dimension	125mm × 92mm × 150mm

1.3 Notice

1. Only adults who have fully read and understood this manual are allowed to operate this product.
2. Make sure the Joystick is properly installed before use.
3. When enabling assisted functions such as Heading Hold or AnchorPoint, maintain active observation of the boat's surroundings.

1.4 EU Declaration of Conformity

We Guangdong ePropulsion Technology Limited, hereby, declares that this equipment is compliance with the applicable Directives and European Norms, and amendments.

Object of the Declaration:
Product: Smart Control Joystick
Model: SCJ-eSSA

The object of the declaration is in conformity with the following directives and regulation:

Electromagnetic Compatibility (EMC) Directive 2014/30/EU
Restriction of Hazardous Substances Directive 2011/65/EU and Delegated Directive (EU) 2015/863
EC REACH Regulation (EC 1907/2006)
Regulation on General Product Safety 2023/988

Applied Standards:
ISO 25197:2020

This declaration of conformity is issued under the sole responsibility of the manufacturer: Guangdong ePropulsion Technology Limited.
Address: Room 801, Building 1, 11 Daxue Road, Songshan Lake, Dongguan, Guangdong Province, China

Signature:  **Date:** 2025.8.8
Shizheng Tao, Chief Executive Officer & Cofounder of
Guangdong ePropulsion Technology Limited

1.5 FCC Compliance Statement

This device complies with Part 15 of the FCC Rules. Operation is subject to the following two conditions:
(1) This device may not cause harmful interference, and
(2) this device must accept any interference received, including interference that may cause undesired operation.

1.6 Disposal and Environment



This marking indicates that this product should not be disposed with other household wastes throughout the EU. To prevent possible harm to the environment or human health from uncontrolled waste disposal, recycle it responsibly to promote the sustainable reuse of material resources. To return your used device, please use the return and collection systems or contact the retailer where the product was purchased. They can take this product for environmental safe recycling.

2 Installation and Wiring

Please refer to the following steps for installation and wiring.

Step 1: Use the mounting template to drill holes on the mounting plate.

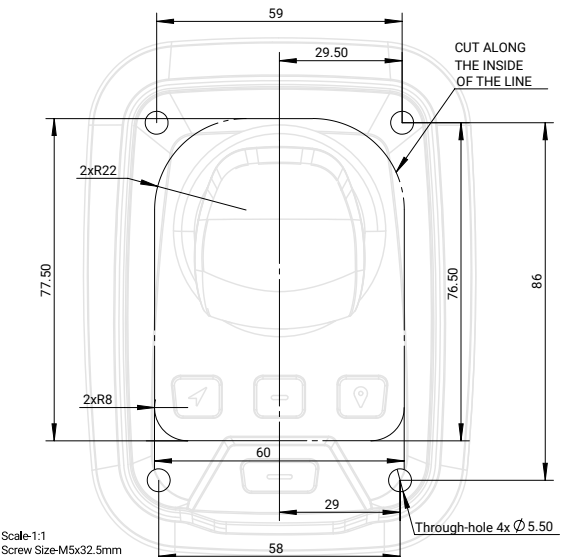

Step 2: Align the Joystick with the holes, position it correctly, and secure it using the hex locknuts.

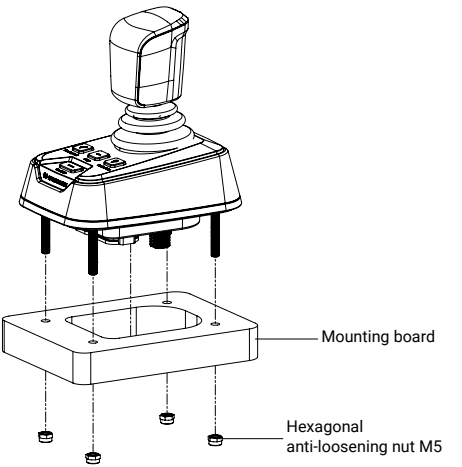

Completed installation.

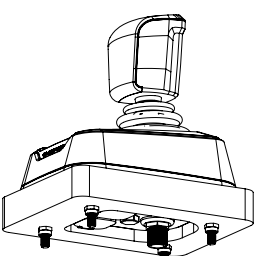

Step 3: Connect the communication cable to one of the three connectors on the bottom of the device as shown below. Determine which connector to use based on whether the Joystick communication cable connector included in the package.

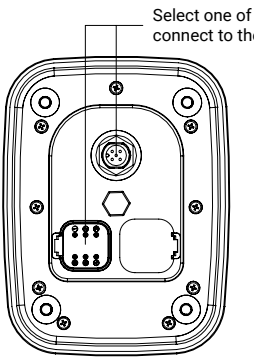

The joystick can only be connected to the EP CAN bus and cannot be integrated with the NMEA2000.

3 Function

3.1 Setting before Use

After installation is complete, prior to using the Smart Control Joystick, please complete the relevant settings on the display's ADAS page. This includes entering vessel dimension information, sensor calibration, Mode Intensity setting, and output power configuration.



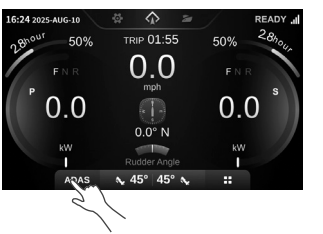

3.2 Function Description

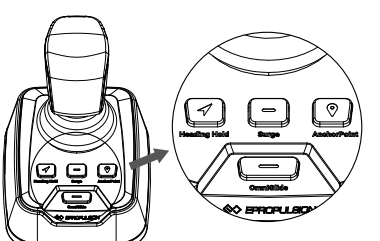

3.2.1 OmniGlide

When enabled, the joystick can be used to control vessel movement within a functional range, including forward, backward, and steering.

Enable: With the throttle in Neutral (N), press the OmniGlide button on the Joystick once to enable. The illuminated button indicator confirms successful activation.

Disable: Press the button once while enabled to disable, or operate the vessel using the throttle or steering wheel and the OmniGlide function will deactivate. The extinguished button indicator confirms deactivation.

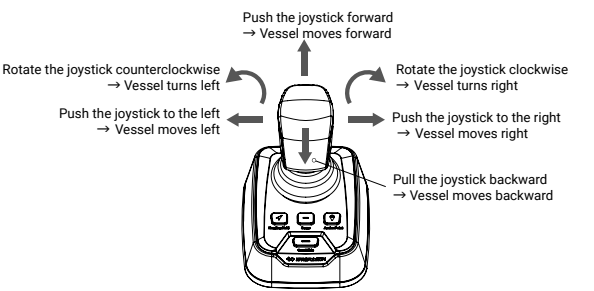

Note: The left or right moving function is only available for dual-motor configurations.

3.2.2 Heading Hold

When enabled, the vessel maintains its current heading. Can be enabled in both stationary or moving states.

Enable: Press the Heading Hold button on the Joystick once, or press the HOLD button on the throttle, or use the function button on the display's ADAS page. The illuminated button indicator confirms successful activation.

Disable: Press the function button once while enabled to disable, or manually adjust the steering wheel or throttle, and the function will deactivate, or use the function button on the display page. The extinguished button indicator confirms deactivation.

Fine tuning/Adjusting heading during Heading Hold.

1. Rotate the joystick once and release to adjust the heading by 10°. Rapidly rotating multiple times allows cumulative adjustments up to a maximum of 180°.

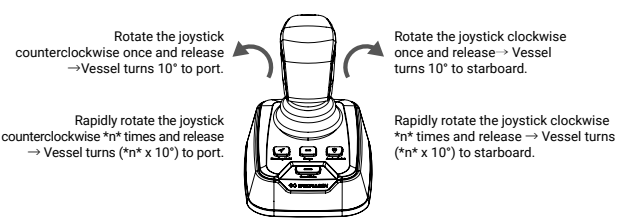

2. Vessel heading can also be adjusted via the display's ADAS page.

3.2.3 AnchorPoint

When enabled, the vessel's position is maintained within a certain range of the current location.

Enable: With the throttle in Neutral (N), press the AnchorPoint button on the Joystick once, or use the function button on the display's ADAS page. The

illuminated button indicator confirms successful activation.

Disable: Press the button once while enabled to disable, or manually adjust the steering wheel or throttle, or operate via the display page. The extinguished button indicator confirms deactivation.

Fine-tuning of the position is supported during AnchorPoint.

1. Push the joystick to fine-tune the vessel's position. Pushing fully forward or backward and quickly releasing adjusts the vessel's position by approximately 3m. Rapidly pushing multiple times allows cumulative distance adjustments, up to a maximum of 12m.

Note: Single-motor vessels only support forward and backward adjustment. Dual-motor vessels support 360° adjustment.

2. Vessel position can also be adjusted via the display's ADAS page.

3.2.4 Surge

This function augments the Heading Hold and AnchorPoint features. When enabled in windy or wavy conditions, it increases output power to enhance the performance of assisted piloting functions.

Enable: While the Heading Hold or AnchorPoint function is active, press the Surge button on the Joystick once to enable. The illuminated button indicator confirms successful activation.

Disable: Press the button once while enabled to disable, or disable via the display's ADAS page function. The extinguished button indicator confirms deactivation.

The output power in the Surge mode can be adjusted through the ADAS settings page on the display.



4 Limited Warranty

Guangdong ePropulsion Technology Co., Ltd. (“ePropulsion”), China, warrants its products to be free of defects in material and workmanship under normal usage with proper installation and routine maintenance for a period of twenty-four (24) months from the date of delivery of invoice (the “Limited Warranty Period”). The Limited Warranty is provided to the first end customer of ePropulsion products ONLY. The Customer is entitled to free repair or replacement of defective or non-conforming parts. Any warranty claim must be made within six (6) months of discovery of issues as provided below.

If the Limited Warranty Period has expired, you can still enjoy maintenance services from dealers/distributors authorized by ePropulsion (the “ePropulsion Service Partners”) who will endeavour to keep costs to a minimum.

In all warranty cases, ePropulsion will only bear the repair or replacement cost for items that are covered by the Limited Warranty. Any costs not covered by the Limited Warranty – such as those related to product installation, disassembly, transportation, financing, rental, etc – shall be borne by the customer alone.

Beyond the Limited Warranty, the Customer may have statutory rights in their jurisdiction according to applicable laws. Nothing in this Limited Warranty affects such rights. The Customer may have warranty claim rights arising from the purchase contract with ePropulsion Service Partners in addition to the rights granted by this Limited Warranty.

Products used for commercial or professional purposes*, even if only temporarily, are not covered by the Limited Warranty. Instead, the statutory warranty in your jurisdiction shall apply. You are encouraged to consult with ePropulsion Service Partners for applicable warranty and advice before engaging in such use.

*** Commercial/Professional Purposes include those where the product is used with the intention of making profit, or high frequency, or very high reliability requirements, etc.**

To keep your warranty valid, please note the following:


Products without the original product label will not be covered by ePropulsion's Limited Warranty. Keep the product label intact and record the serial number from it. Never remove the label from the product;


The Limited Warranty is not transferable and will not be reissued;


The Limited Warranty may change from time to time. Please visit our website (http://www.epropulsion.com) for the latest version.

Capacity guarantee for high-voltage batteries

A guarantee of the capacity of the high-voltage batteries, in addition to the standard guarantee. Depending on the long-term average temperature and the usage profile, this guarantee runs for a longer life.

Comment on average temperature:

The average temperature is calculated using the Arrhenius equation; this means that higher temperatures are given a greater weighting.

4.1 Warranty Exclusions

ePropulsion may refuse a warranty claim if:

- The product is operated in contradiction to what is written in the user manual;
- Damage is caused by accident, misuse, dropping, improper care or storage, wilful abuse, physical damage, unauthorized repair;
- Water ingress is caused by external sources such as fishing nets, submersion, etc;
- Product has been modified, altered, dismantled, or had parts/accessories attached in any way not expressly permitted or recommended by ePropulsion;
- Due to failure of, or damage caused by, any 3rd party products;
- The high-voltage batteries have been repositioned in the boat, without contacting ePropulsion service. Repositioning may result in changes to cabling, and other risks to system operation;
- The battery has been incorrectly charged, overcharged, over-discharged, or operated in temp out of scope described in the user manual;
- Consumables (such as replacement propeller, anodes, oil/fluids...etc.);
- Purchases of products from unauthorized dealers or sellers;
- Normal wear and tear and routine servicing;
- Damage caused by improper packing or handling of the product during its return. The additional damage part will be deemed out of warranty;
- Incorrect shipping of lithium batteries. These are classed as a UN9 hazardous item, and must be shipped in accordance with regulations in your jurisdiction. Non-compliance may result in warranty exclusion.

4.2 Limited Warranty Claim Procedures

The process shown below must be followed in order to make a Limited Warranty claim:

1. Contact your nearest ePropulsion Service Partner with details of the problem. They will advise if such defects are covered by the Limited Warranty or any additional rights you may have from your purchase.
2. Send the defective product to them (or the Service Partner they advise) together with Proof of 1(st)-time (first time) Purchase (e.g., receipt, invoice, etc., with information of product purchased and date of purchase), the Confirmation of Online Warranty Registration, ex-factory Serial Number, etc. Note that all labels must be kept intact. Warranty claims will only be valid only when the information above is correct, genuine, and complete.
3. Make sure the product is properly packed during delivery, the original packaging is highly recommended.
4. The ePropulsion Service Partner will examine and diagnose the defective products to check the validity of the warranty claim.
5. If your warranty claim is accepted, the Product or its defective components/ parts will be either repaired or replaced free of charge. Note that any delivery cost incurred in the process shall be borne by you.
6. If your warranty claim is rejected, a repair/replacement cost and fee with round trip delivery cost will be estimated and sent to you for confirmation. ePropulsion Service Partners will only begin the work after your written confirmation that you wish to proceed with the repair/ replacement and will pay for it.

ePropulsion

(*In order to validate warranty, please fill in this form first and read the Warranty Policies.)

|| OWNER INFO. ||

Owner Name			
Address			
Phone		Email	

|| DEALER INFO. ||

Store Name			
Address			
Phone		Email	

|| PRODUCT INFO. ||

Date of Purchase (mm/dd/yyyy)	
Serial No.	

Thanks for reading this user manual.
If you have any concerns or find any problems while reading, please don't hesitate to contact us. We are delighted to offer service for you.

Guangdong ePropulsion Technology Limited
Website: www.epropulsion.com
E-Mail: service@epropulsion.com