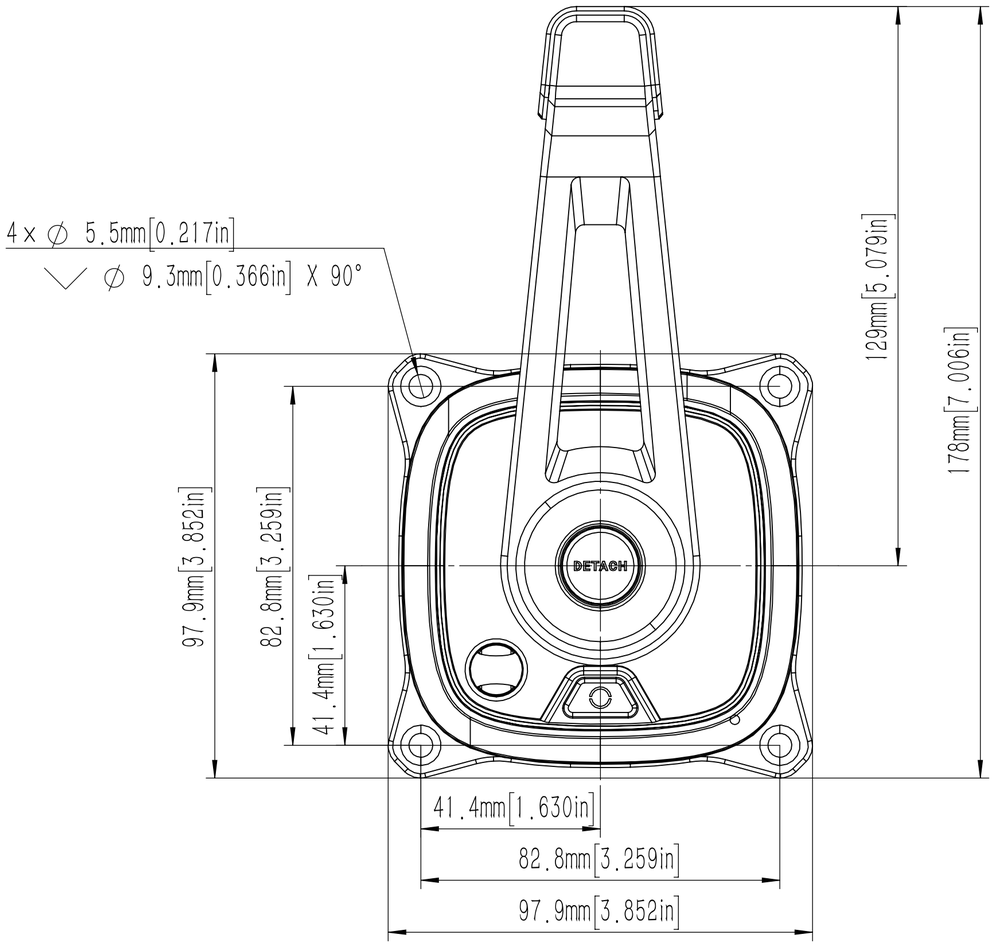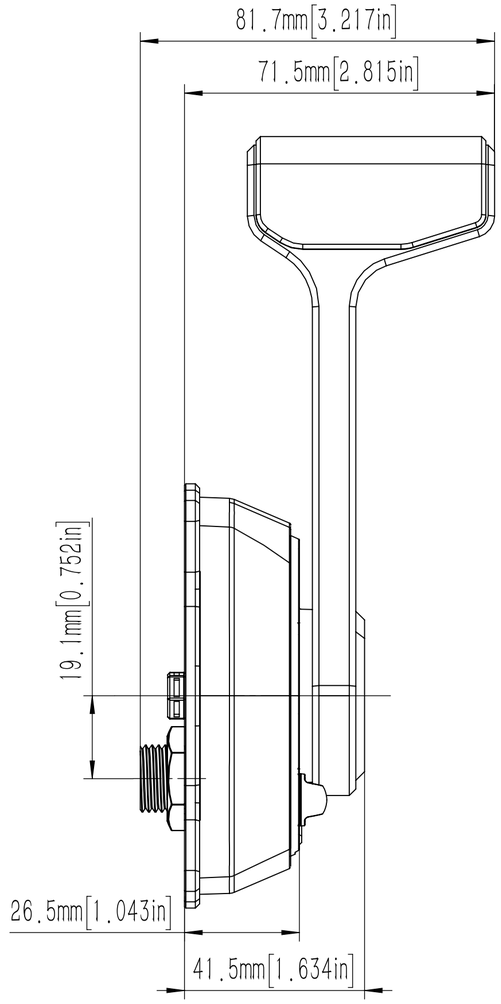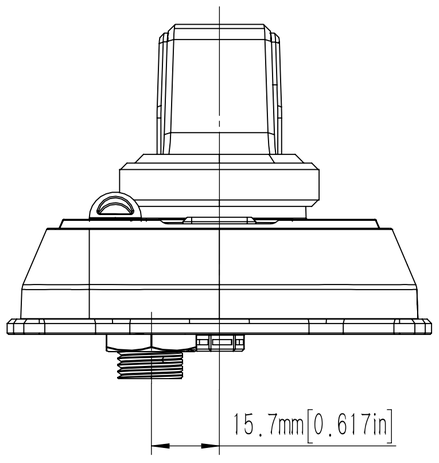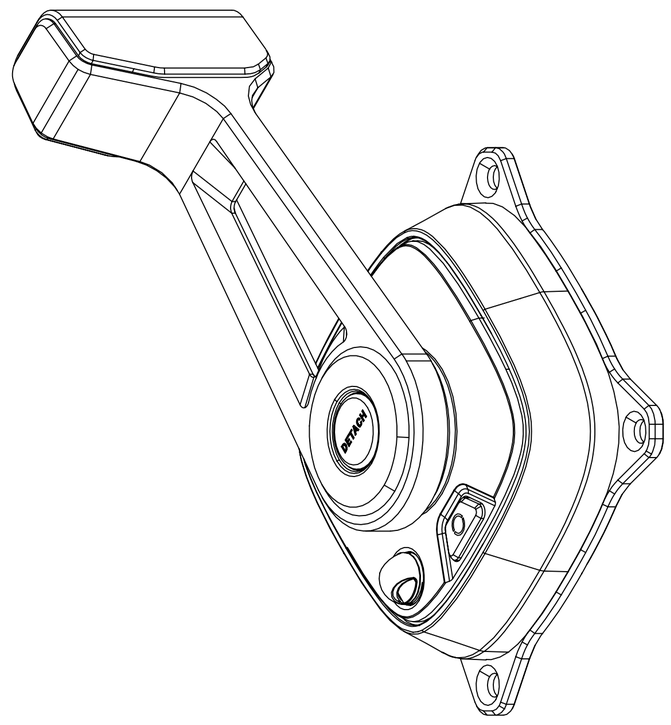EPROPULSION			
Smart Side Mount Control eSSA			
Scale	1: 1	Version	V1.0