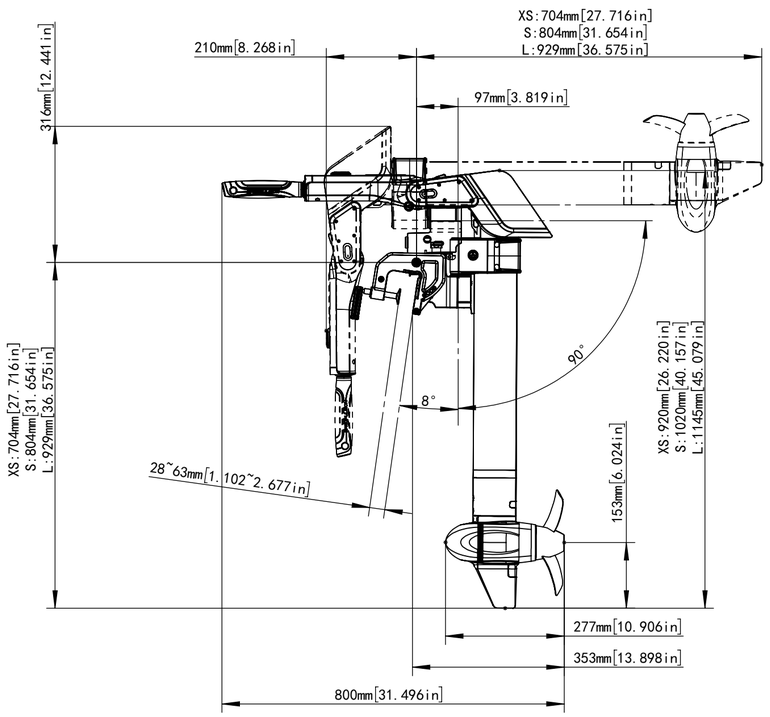

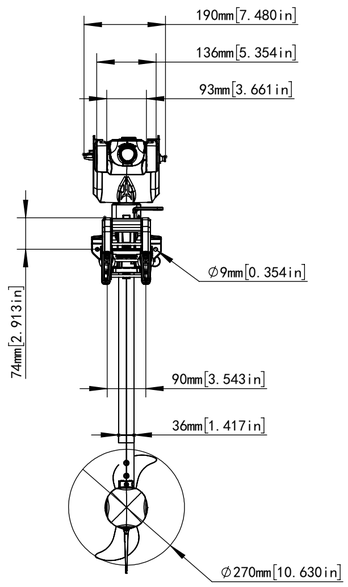

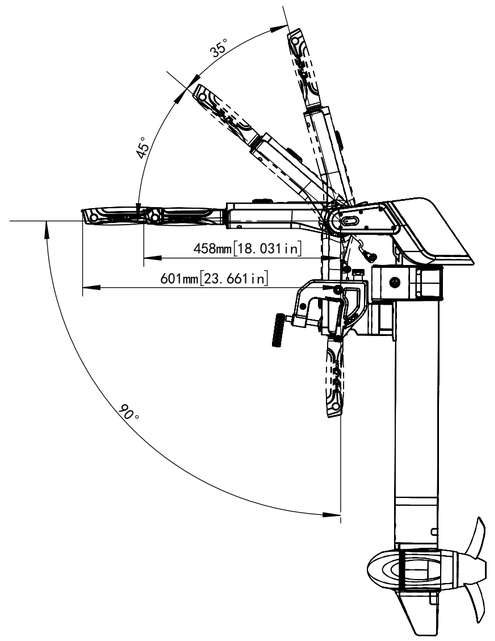

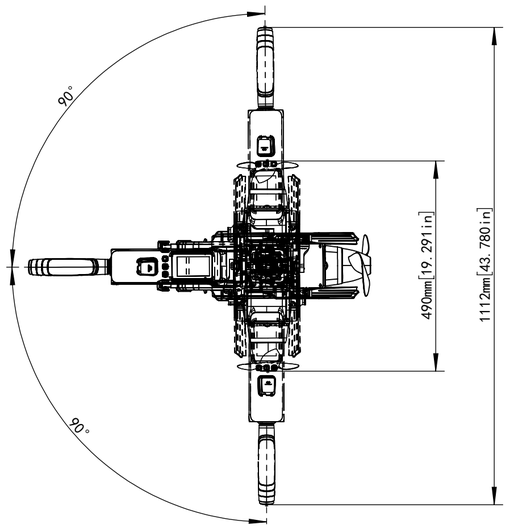

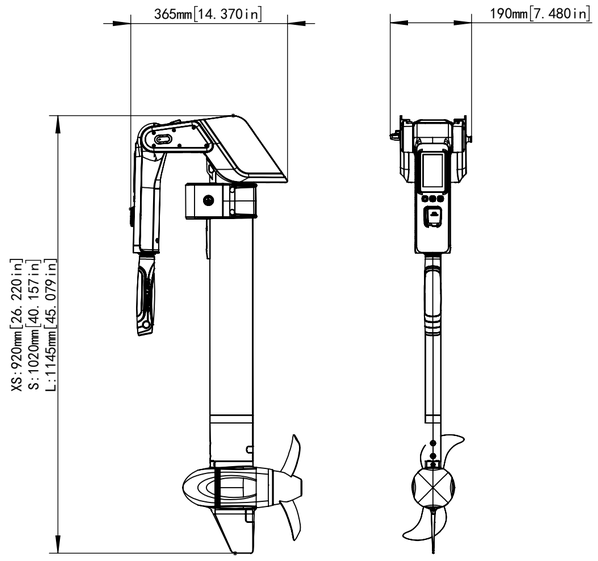

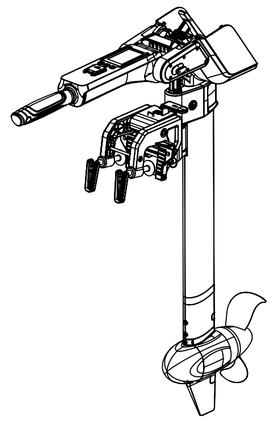

EPROPULSION

Spirit 1 舵杆版

Scale	1:10	Version	V1.0